LUCIA RIMLESS UNIVERSAL TOILET SUITE WITH SOFT CLOSED SEAT

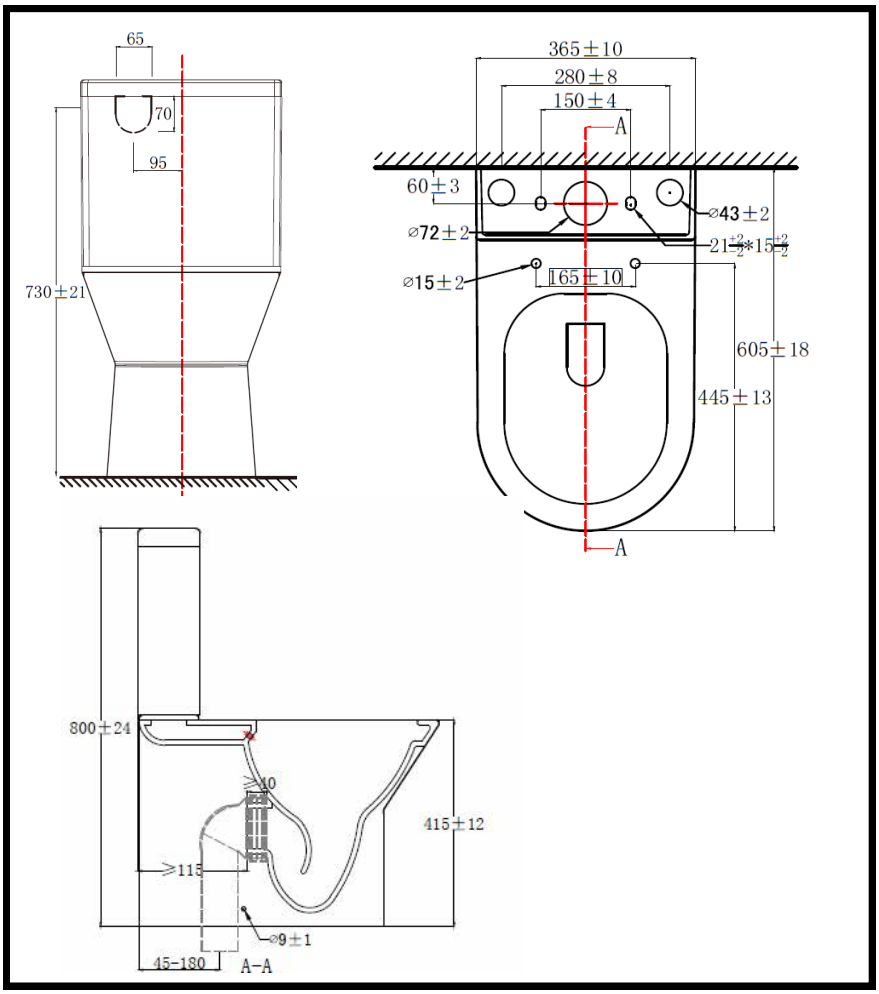

Lucia Rimless Wall Faced Toilet Suite with Soft Closed Seat

Code: 371370

WELS: 4 Star Rating

Kit Comprises of:

351025 Lucia Rimless Cistern Universal Inlet

390027 Lucia Rimless Wall Faced Universal Outlet Pan & Seat