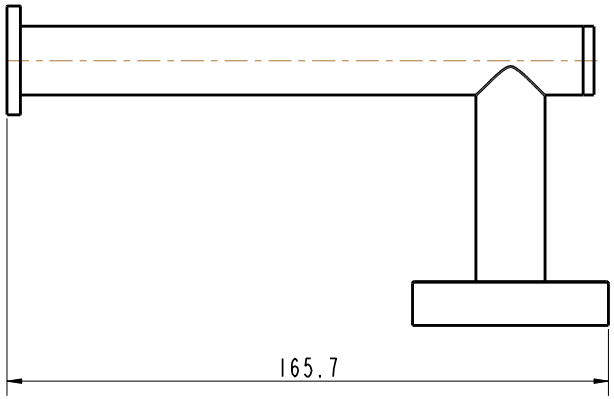
165.7

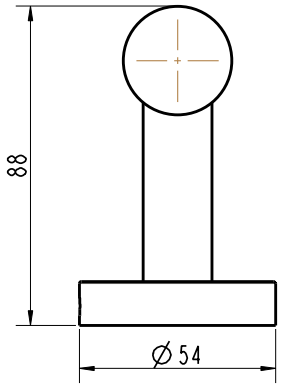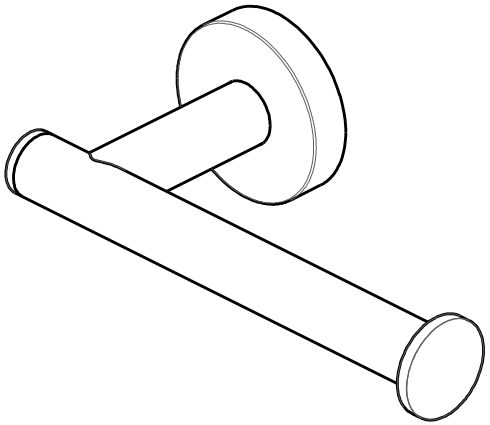
88
∅54