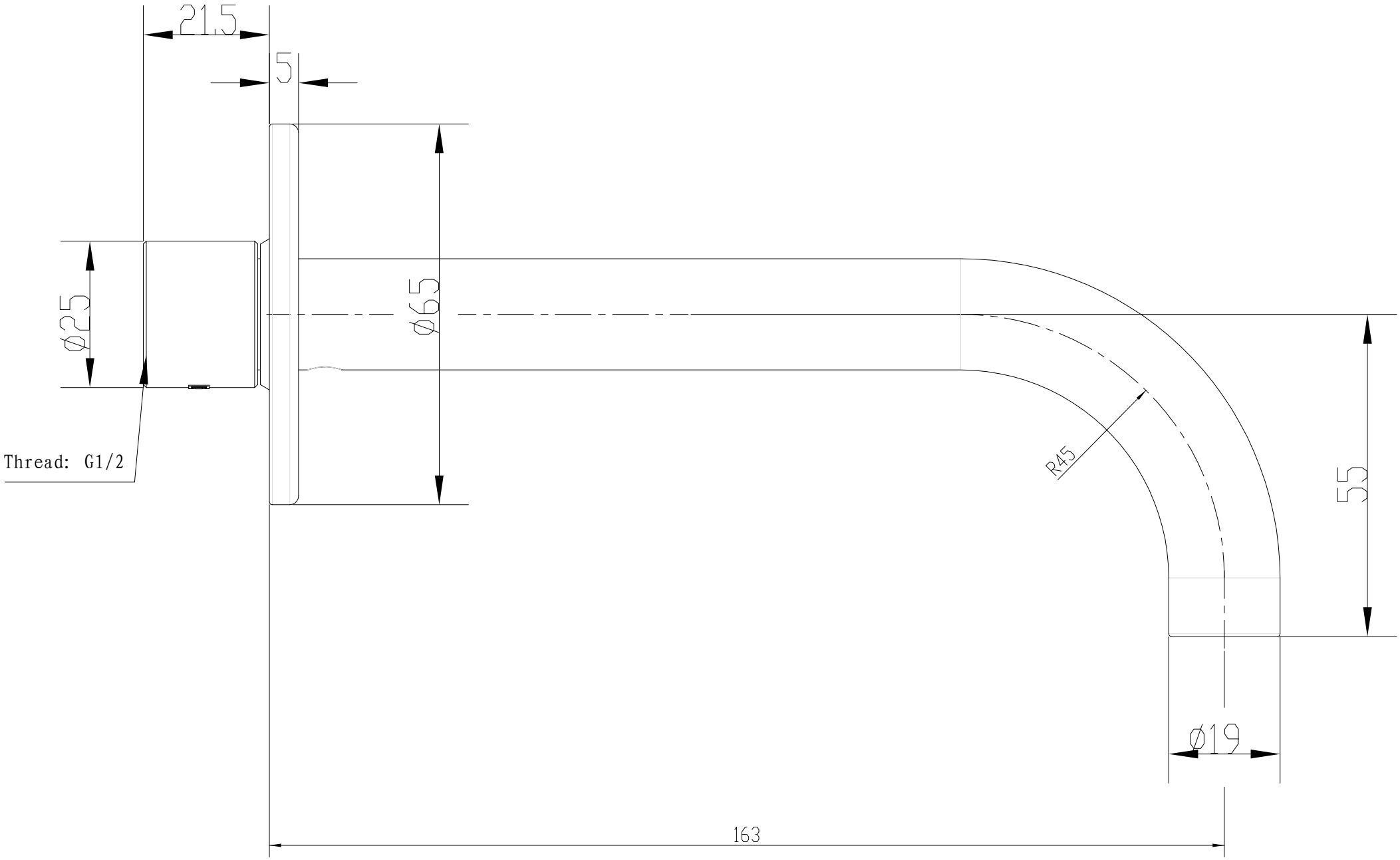
21.5
5
Ø25
Ø65
Thread: G1/2
R45
55
Ø19
163