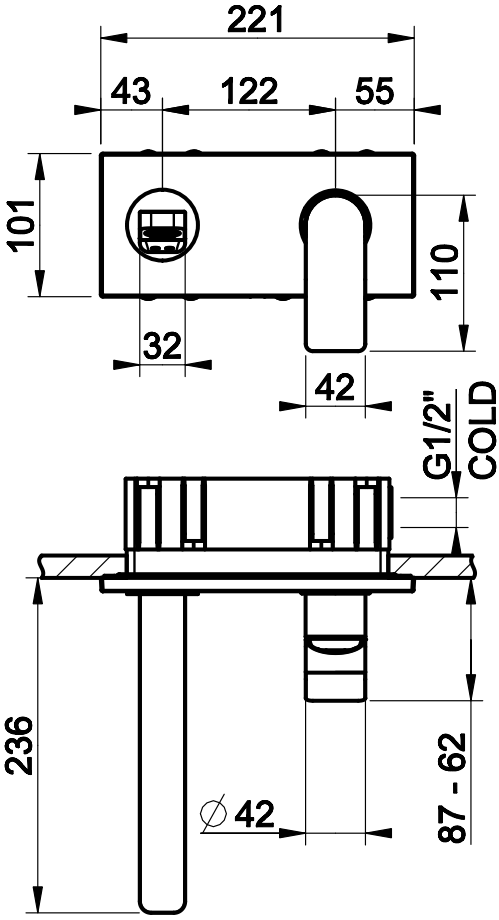
221
43
122
55
101
110
32
42
G1/2"
COLD
236
87 - 62
∅42

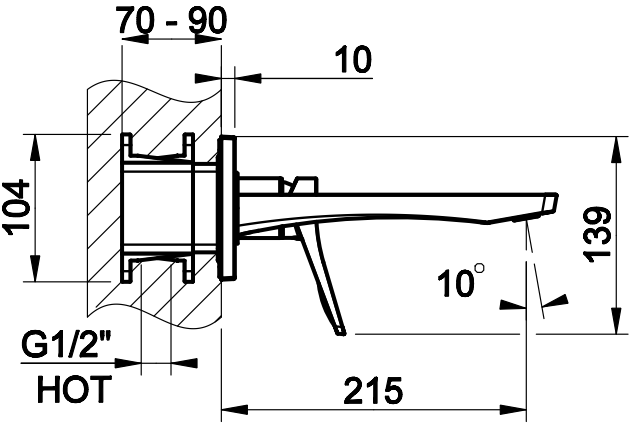
70 - 90
10
104
139
10°
G1/2"
HOT
215