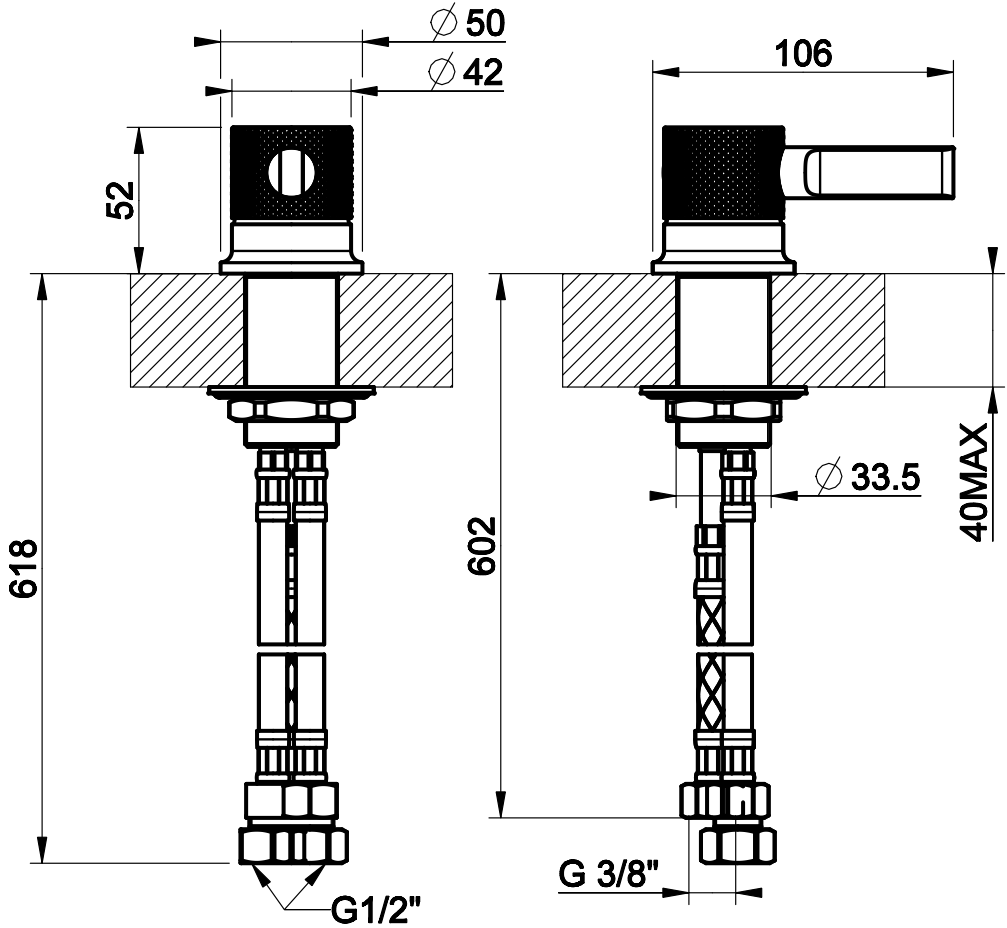
∅50
∅42
52
618
G1/2"
106
602
∅33.5
40MAX
G 3/8"