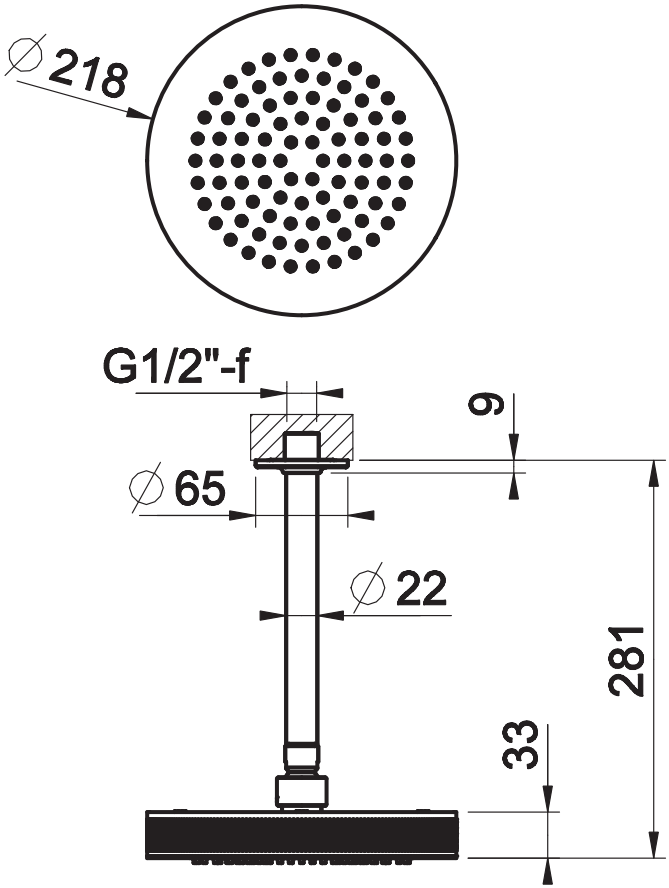
∅218
G1/2"-f
9
∅65
∅22
281
33