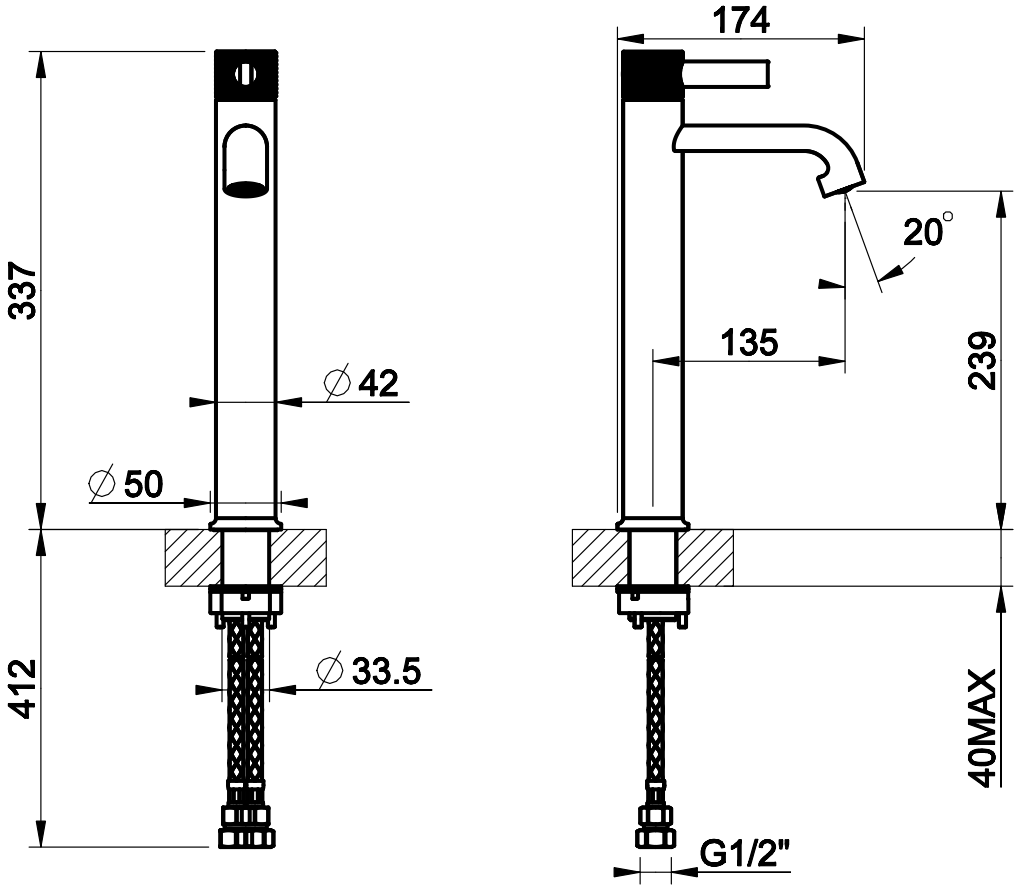
337
∅42
∅50
412
∅33.5
174
20°
135
239
40MAX
G1/2"