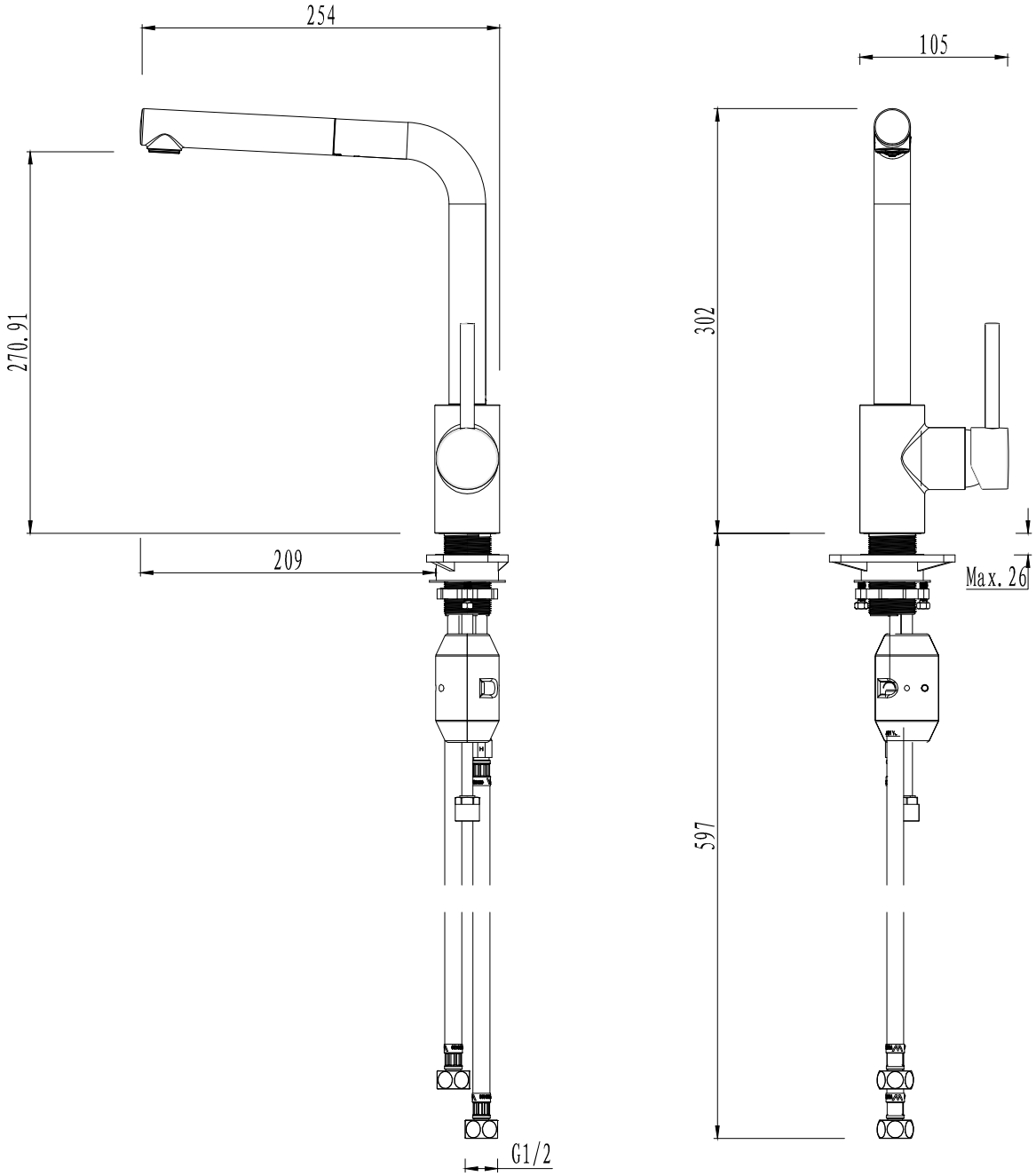
254
105
270.91
302
209
Max. 26
597
G1/2